Halo Static Single Sided Fixed Height Workstation Frame

Instruction Manual

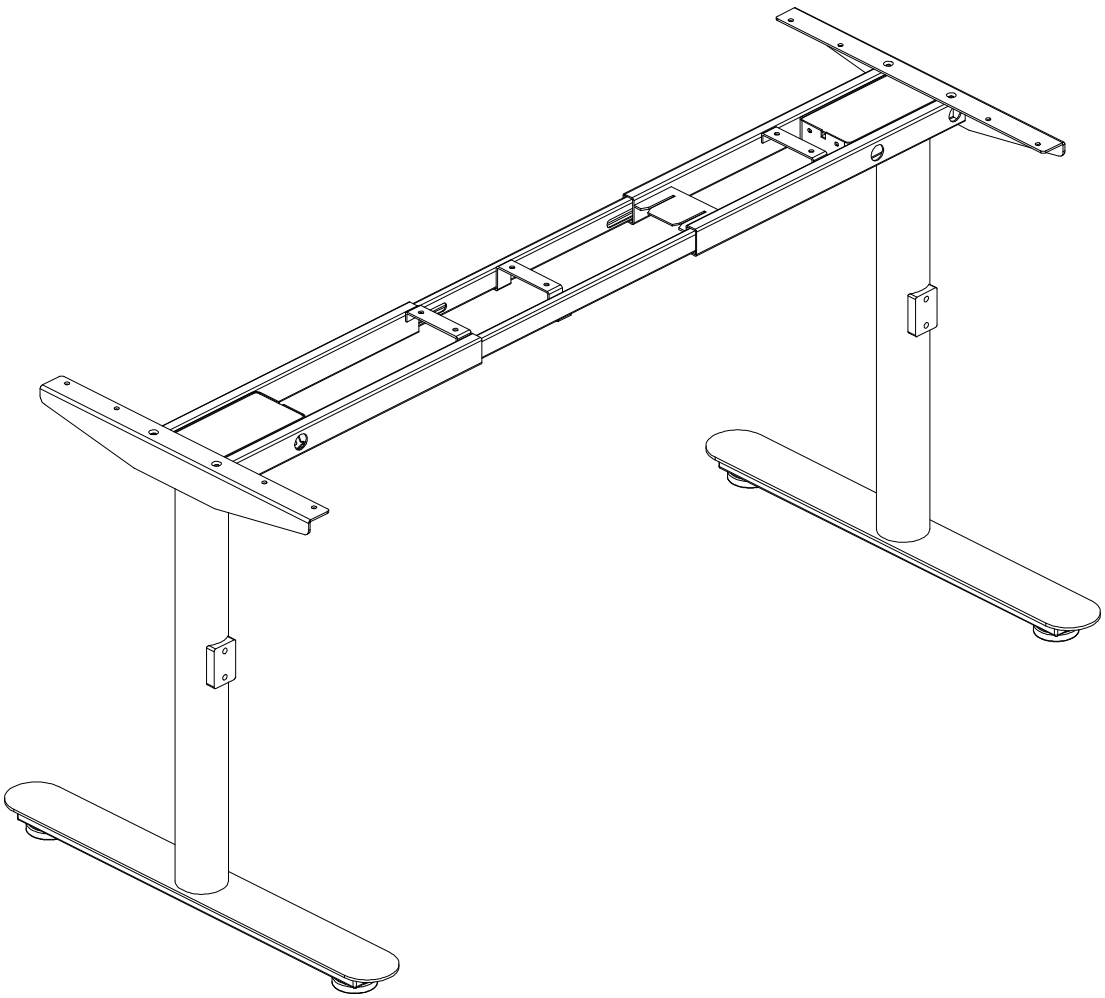

Component parts

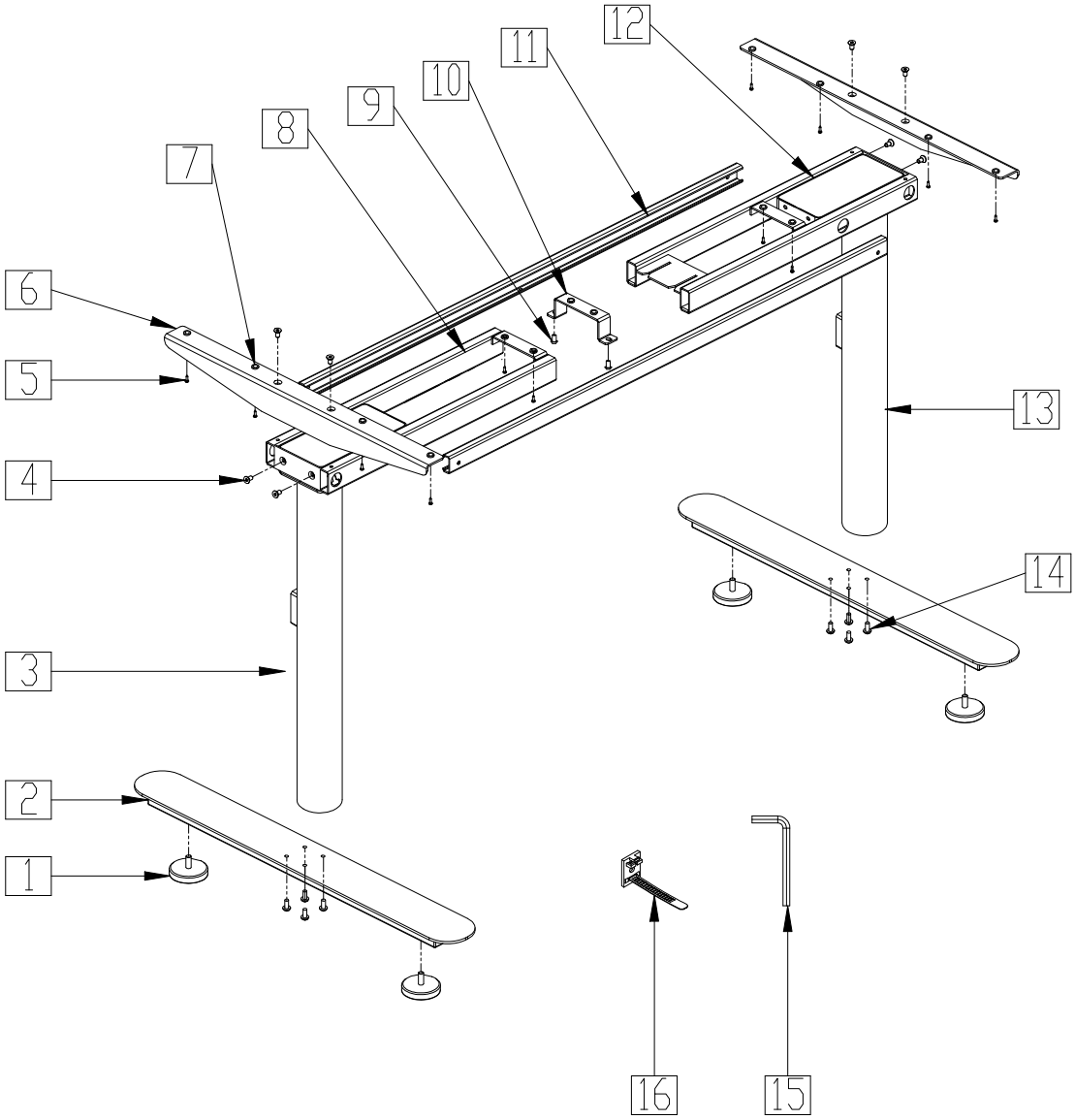

NO.	Component Name	PCS		NO.	Component Name	PCS
1	Leveling pads	4		9	Bolt: M6x10	3
2	Table feet	2		10	Centre bracket	1
3	Column(right)	1		11	Center rails	2
4	Bolt: M6x12	9		12	Top frame-2	1
5	Screw:ST4x20	22		13	Column(left)	1
6	Side brackets	2		14	Bolt: M6x35	9
7	Rubber pad	14		15	Allen Wrench(4mm)	1
8	Top frame-1	1		16	Cable Tie	5

Assembly Instructions

Step 1

Loosen the pre-installed bolts and Adjust the length of the top frame to match the size of the table top.

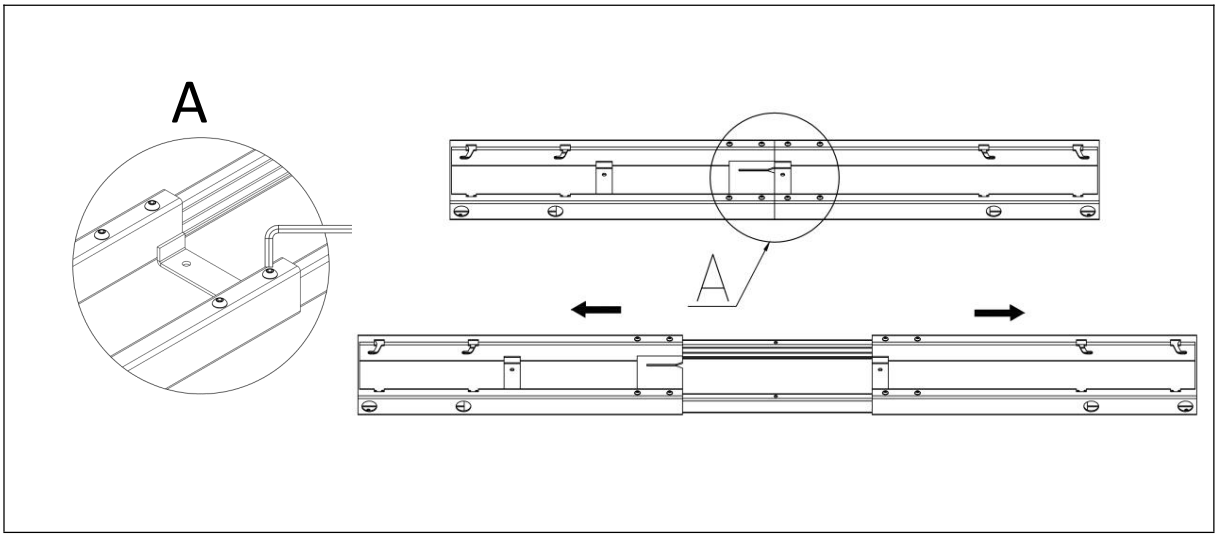

Step 2

Inset the column to the top frame.

- First fix lifting column with 4pcs screws M6x12 like **B** displayed
- And then tighten the pre-installed bolts like **C** displayed

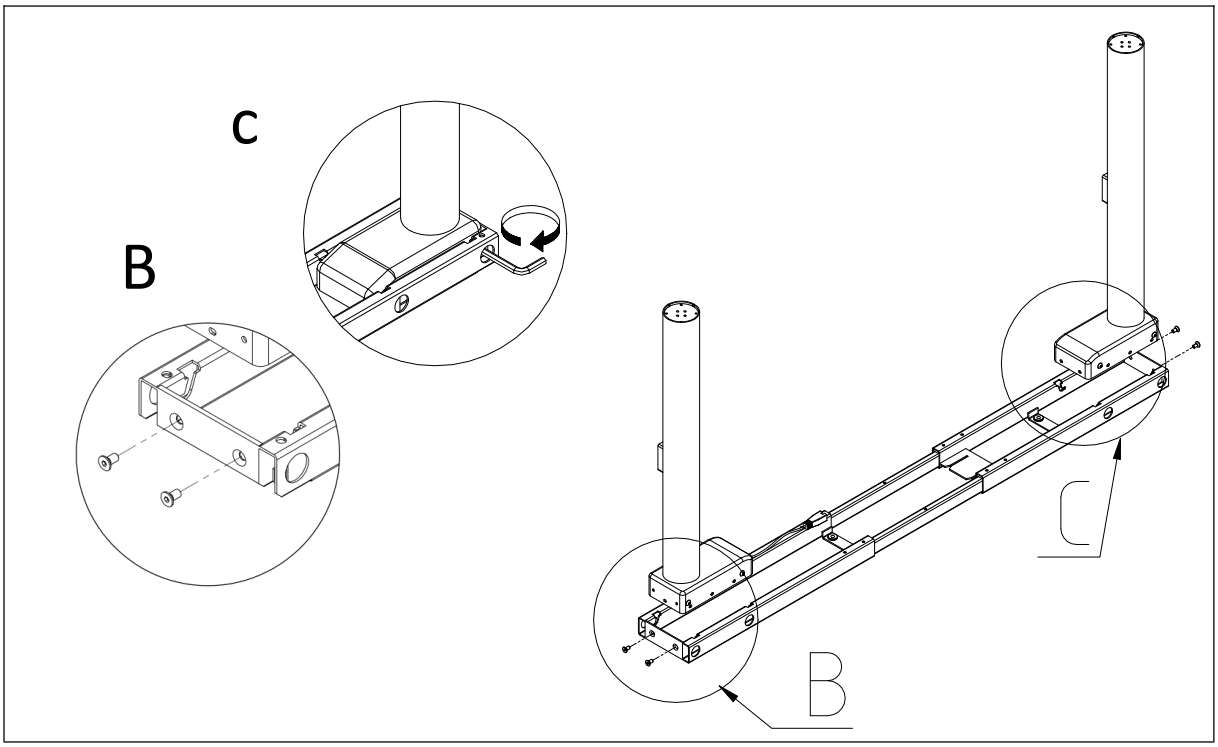

Step 3

Install the two table feet with Screws 8 pcs M6x35,
Install the 4 pcs leveling pads

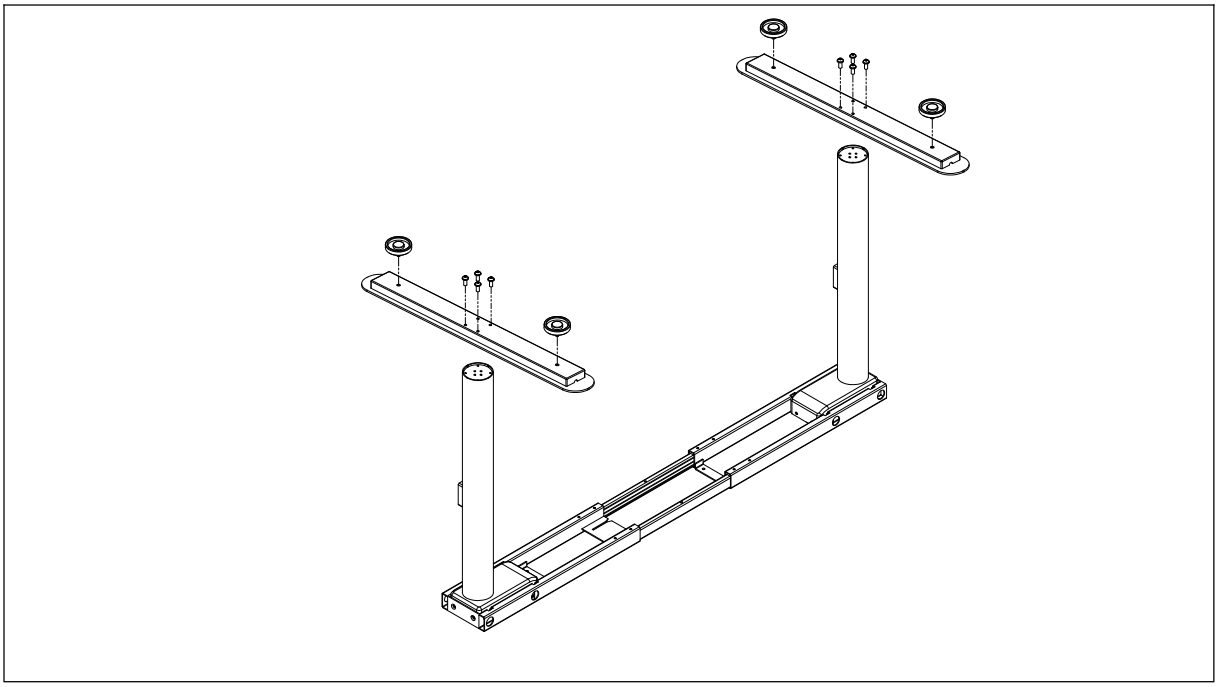

Step 4

Install the two side brackets with Screws 4 pcs M6x12,

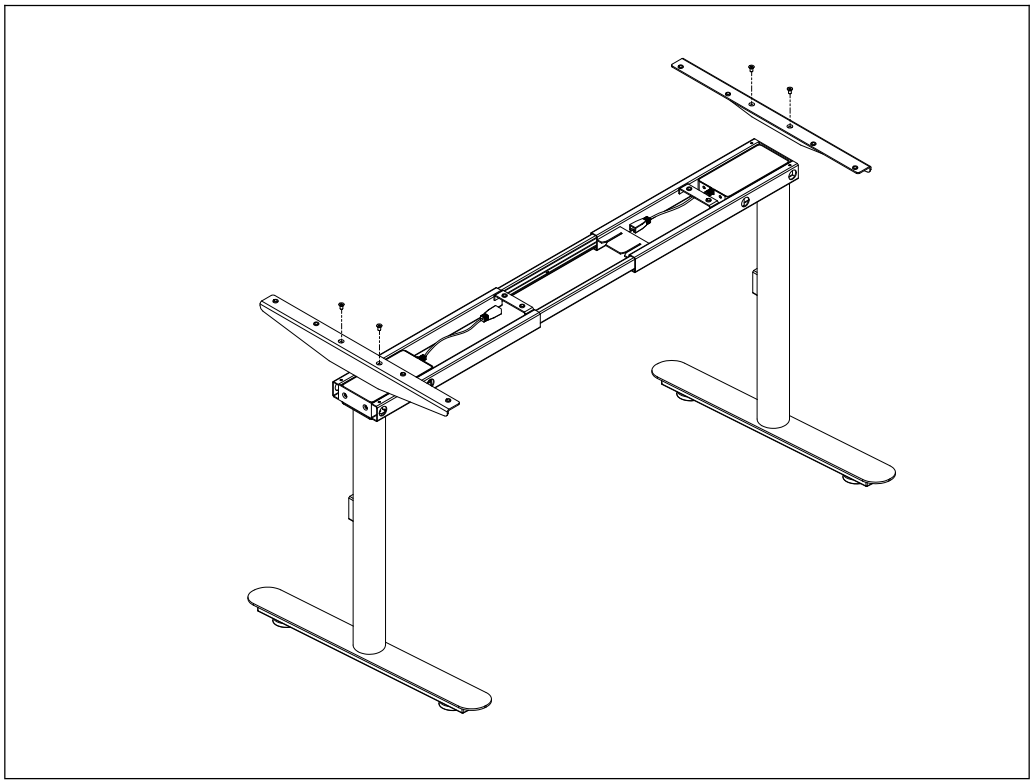

Step 5

Mount the tabletop and fix it with 14 pcs screws ST4x20; Tighten the screws on the top frame.
Fix the centre bracket with 2 pcs screws M6x10

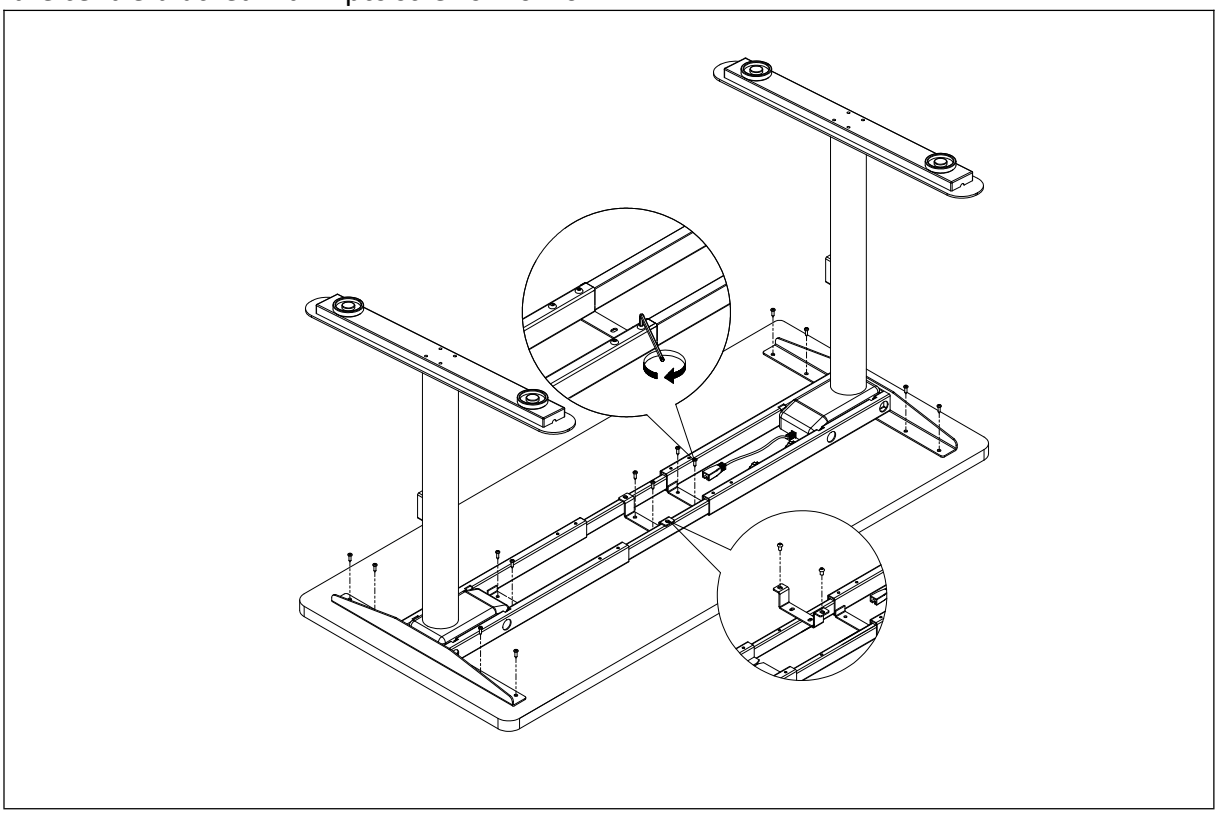

Cable tray installation

Step 1

- Fix the cable tray(B2-SSCT) to the cable tray arms(B2-SSARM) with 8 pcs M6x10 screws.

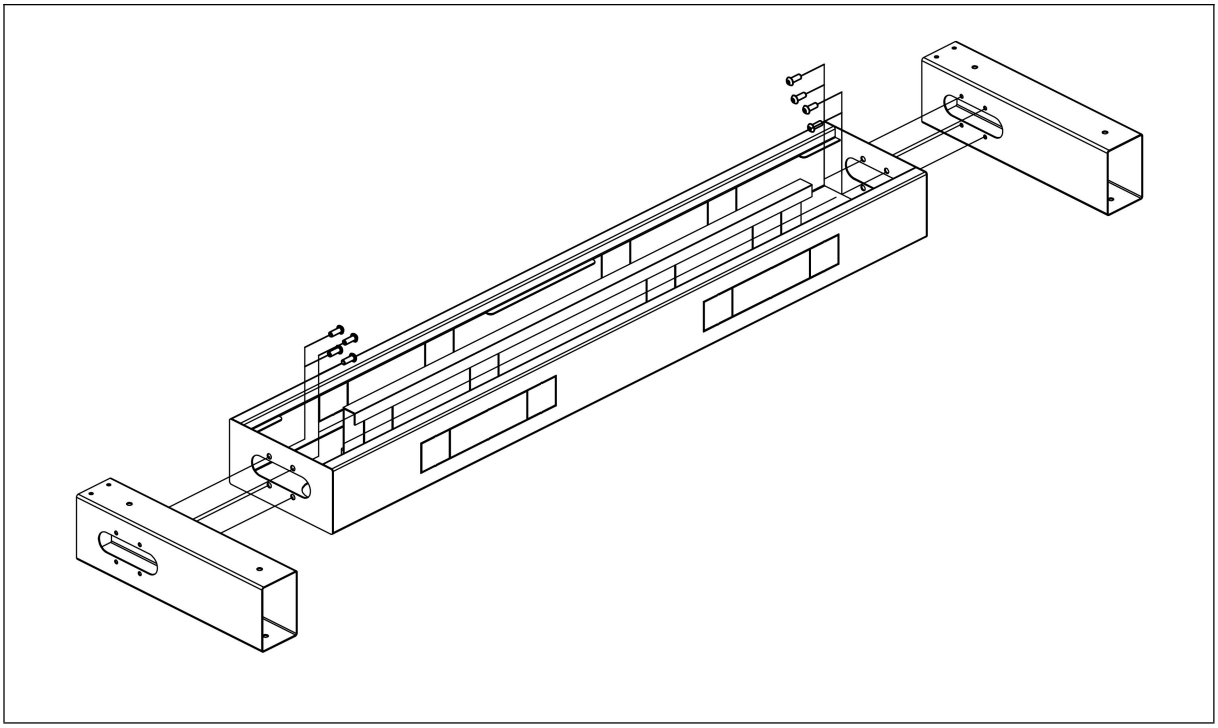

Step 1

- Install the U brackets to the desk frame with 4 pcs M8x10 screws.
- Mount the cable tray to the desk frame and fix it with 6 pcs M6x10 screws

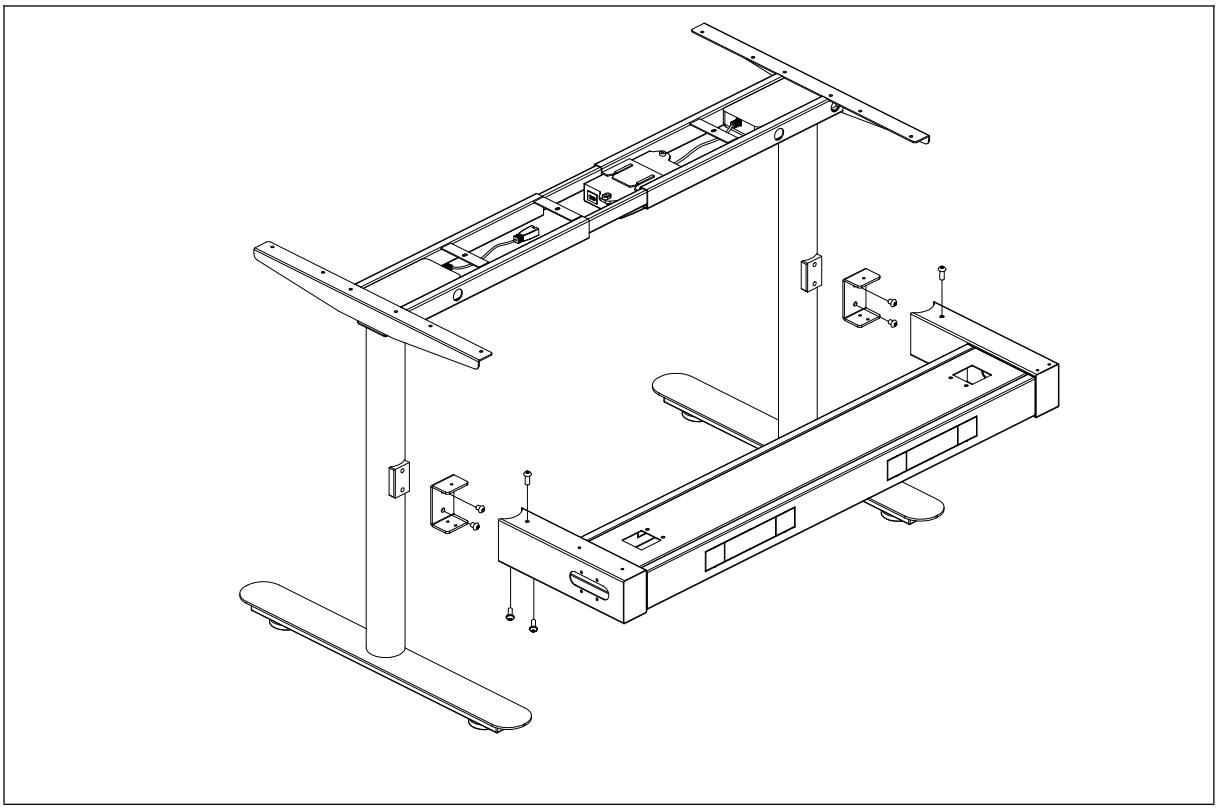

Screen panel installation (Shush30 Privacy Screen)

Step 1

- Insert the tapped plates to the screen panel((plates can be found in B2-SBRAC carton)

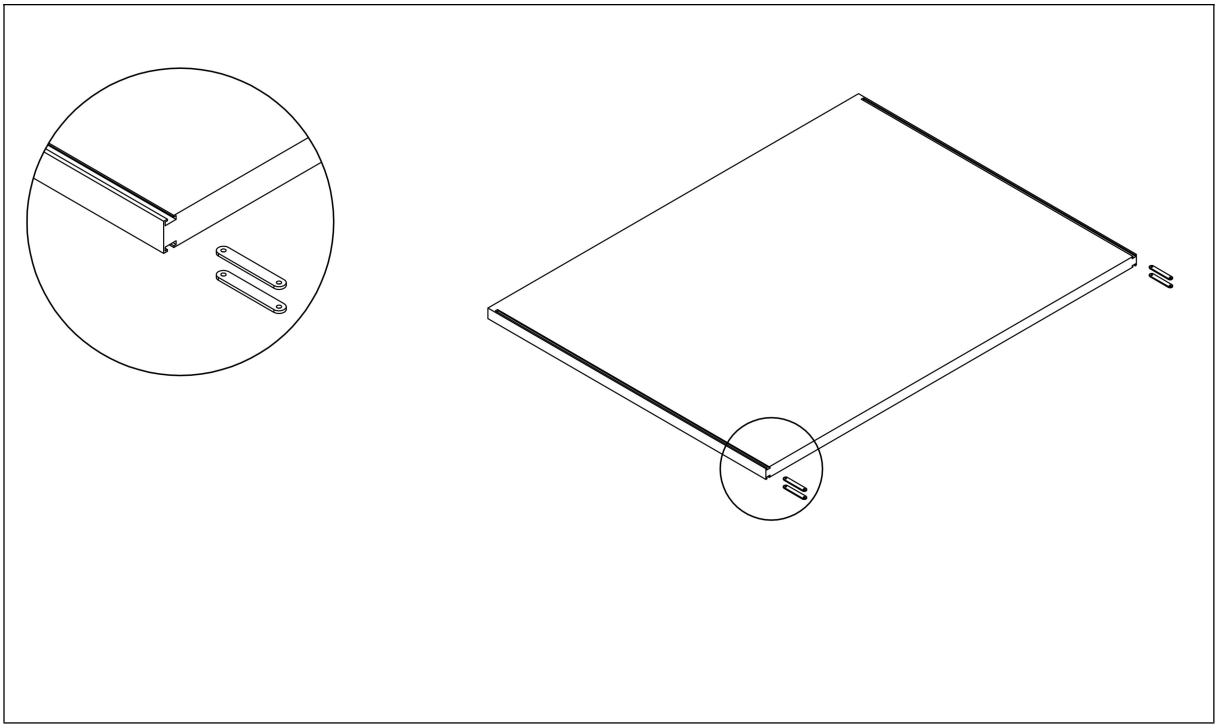

Step 2

- Install the screen brackets(B2-SBRAC) to the panel with 8 pcs M5x6 screws.

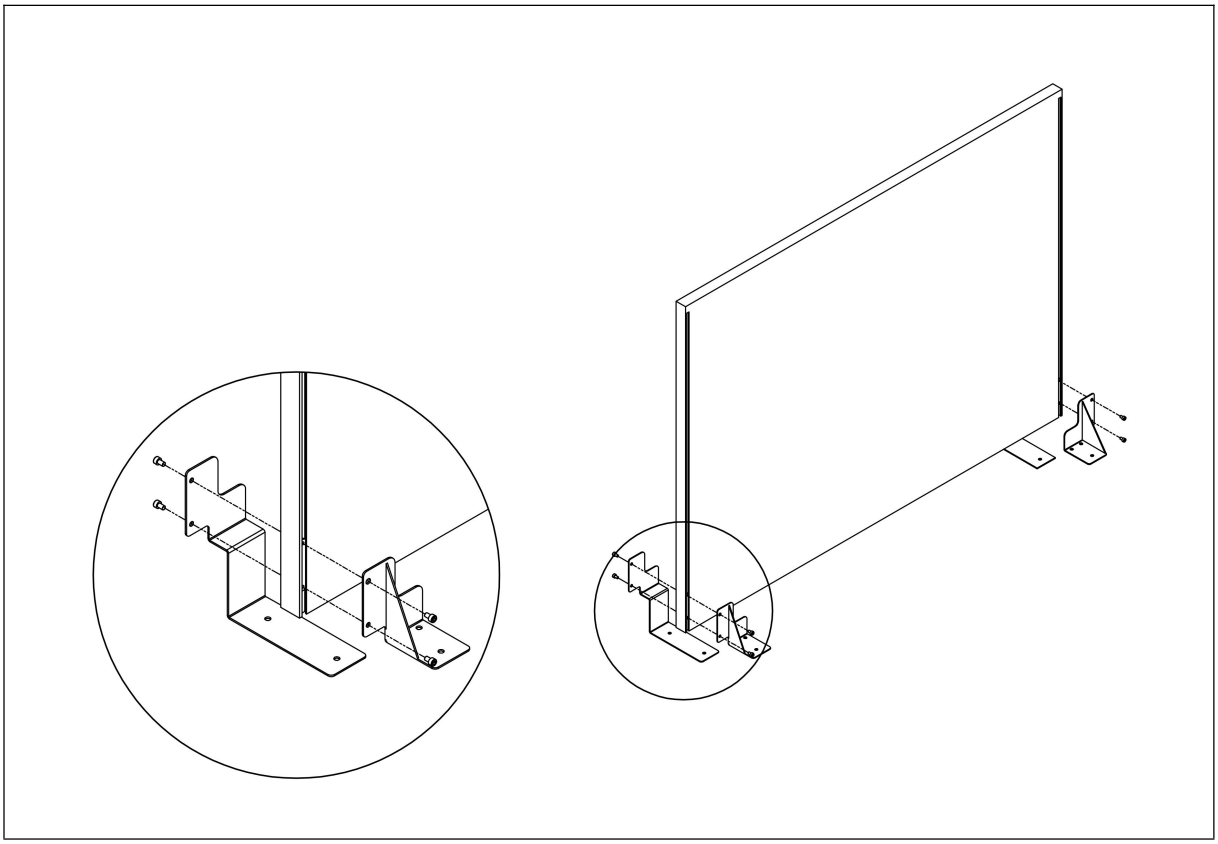

Step 3

- Fix the screen brackets((B2-SBRAC)) to the desk frame with 10 pcs M6x10 screws.

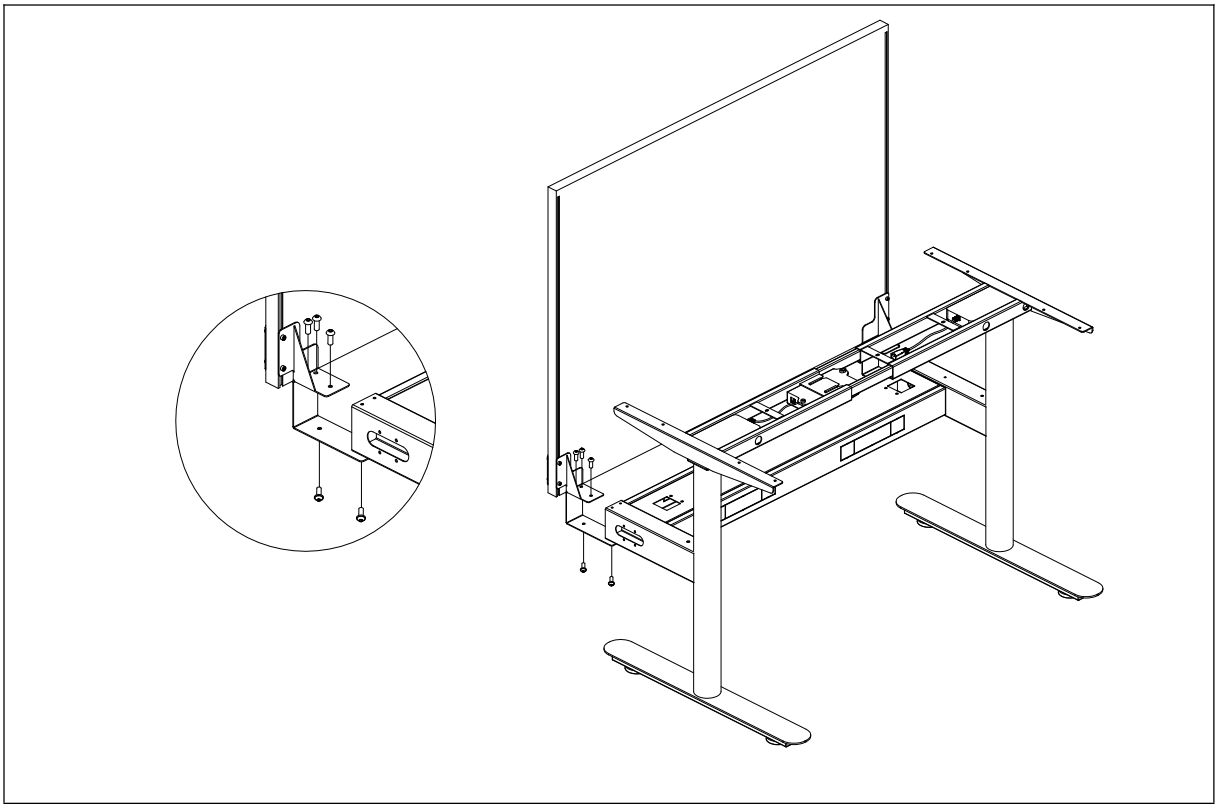

EPS (900mm H Eco Panel) Screen panel installation

Step 1

- Install the screen brackets(B2-SBRAC) with 12 PCS M6x10 Screws
  The brackets direction as photos display.

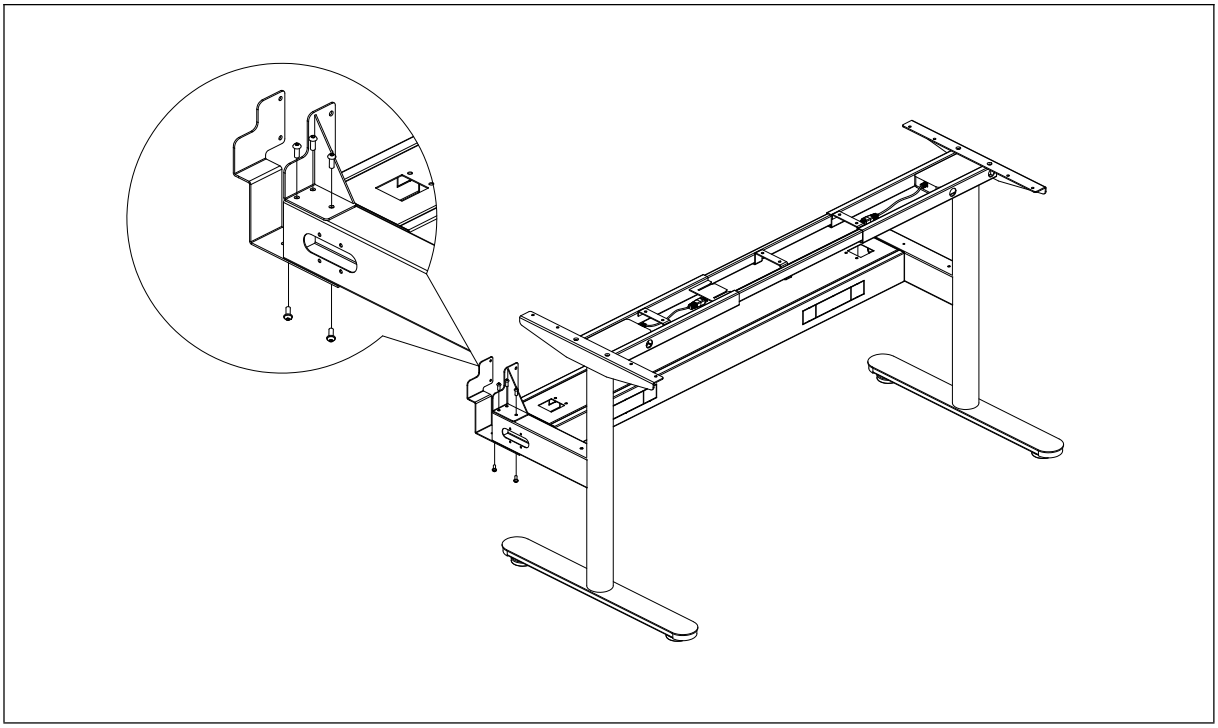

Step 2
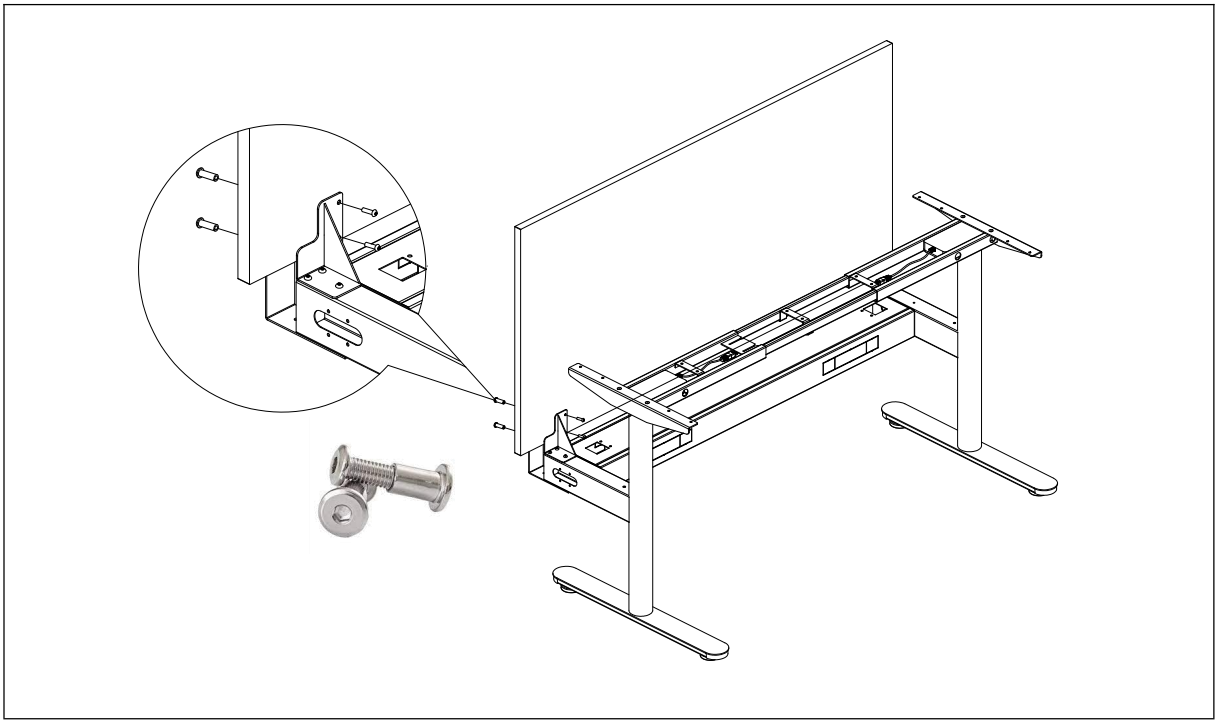
- Place the EPS panel on the screen brackets(B2-SBRAC)
- Using a 6mm drill bit (not included), drill out holes in Eco Panel Screen in line with back to back screen bracket holes (Note: Carbide Drill Bits Work Best For PET panel)
- Place 8 x Double Ended Bolts M5* 32mm - 6mm through screen bracket (B2-SBRAC) holes and the holes you have created in the Eco Panel Screen. Tighten double ended bolt with Allen key.